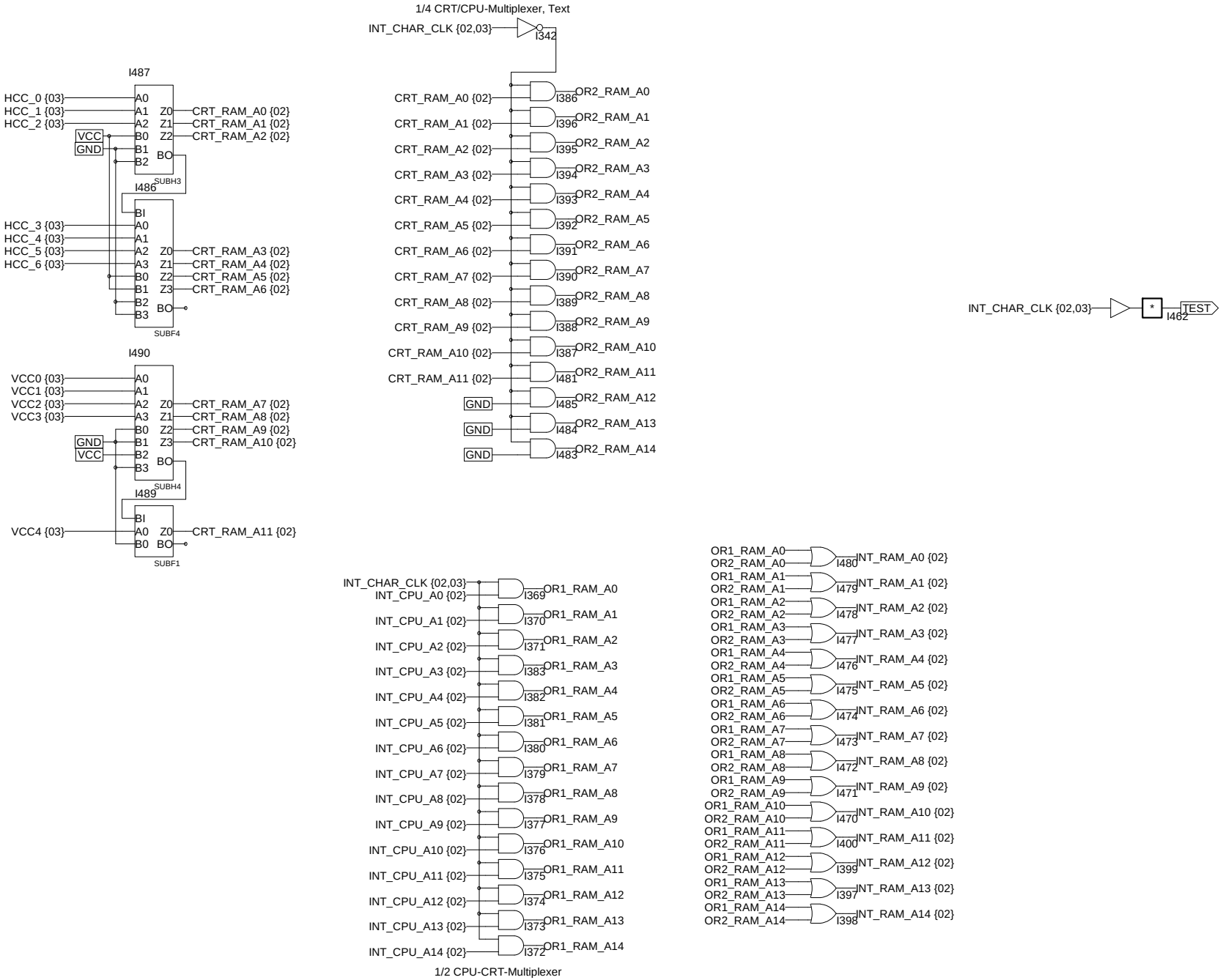
1/4 CRT/CPU-Multiplexer, Text
INT_CHAR_CLK {02,03}
I342
I487
HCC_0 {03}
HCC_1 {03}
HCC_2 {03}
VCC
GND
A0
A1
A2
B0
B1
B2
BO
Z0
Z1
Z2
CRT_RAM_A0 {02}
CRT_RAM_A1 {02}
CRT_RAM_A2 {02}
SUBH3
I486
BI
HCC_3 {03}
HCC_4 {03}
HCC_5 {03}
HCC_6 {03}
A3
B3
Z3
CRT_RAM_A3 {02}
CRT_RAM_A4 {02}
CRT_RAM_A5 {02}
CRT_RAM_A6 {02}
SUBF4
I490
VCC0 {03}
VCC1 {03}
VCC2 {03}
VCC3 {03}
CRT_RAM_A7 {02}
CRT_RAM_A8 {02}
CRT_RAM_A9 {02}
CRT_RAM_A10 {02}
SUBH4
I489
VCC4 {03}
CRT_RAM_A11 {02}
SUBF1
CRT_RAM_A0 {02}
CRT_RAM_A1 {02}
CRT_RAM_A2 {02}
CRT_RAM_A3 {02}
CRT_RAM_A4 {02}
CRT_RAM_A5 {02}
CRT_RAM_A6 {02}
CRT_RAM_A7 {02}
CRT_RAM_A8 {02}
CRT_RAM_A9 {02}
CRT_RAM_A10 {02}
CRT_RAM_A11 {02}
GND
GND
GND
I386 OR2_RAM_A0
I396 OR2_RAM_A1
I395 OR2_RAM_A2
I394 OR2_RAM_A3
I393 OR2_RAM_A4
I392 OR2_RAM_A5
I391 OR2_RAM_A6
I390 OR2_RAM_A7
I389 OR2_RAM_A8
I388 OR2_RAM_A9
I387 OR2_RAM_A10
I481 OR2_RAM_A11
I485 OR2_RAM_A12
I484 OR2_RAM_A13
I483 OR2_RAM_A14
INT_CHAR_CLK {02,03}
*
TEST
I462
INT_CHAR_CLK {02,03}
INT_CPU_A0 {02}
INT_CPU_A1 {02}
INT_CPU_A2 {02}
INT_CPU_A3 {02}
INT_CPU_A4 {02}
INT_CPU_A5 {02}
INT_CPU_A6 {02}
INT_CPU_A7 {02}
INT_CPU_A8 {02}
INT_CPU_A9 {02}
INT_CPU_A10 {02}
INT_CPU_A11 {02}
INT_CPU_A12 {02}
INT_CPU_A13 {02}
INT_CPU_A14 {02}
I369 OR1_RAM_A0
I370 OR1_RAM_A1
I371 OR1_RAM_A2
I383 OR1_RAM_A3
I382 OR1_RAM_A4
I381 OR1_RAM_A5
I380 OR1_RAM_A6
I379 OR1_RAM_A7
I378 OR1_RAM_A8
I377 OR1_RAM_A9
I376 OR1_RAM_A10
I375 OR1_RAM_A11
I374 OR1_RAM_A12
I373 OR1_RAM_A13
I372 OR1_RAM_A14
1/2 CPU-CRT-Multiplexer
OR1_RAM_A0
OR2_RAM_A0
I480 INT_RAM_A0 {02}
OR1_RAM_A1
OR2_RAM_A1
I479 INT_RAM_A1 {02}
OR1_RAM_A2
OR2_RAM_A2
I478 INT_RAM_A2 {02}
OR1_RAM_A3
OR2_RAM_A3
I477 INT_RAM_A3 {02}
OR1_RAM_A4
OR2_RAM_A4
I476 INT_RAM_A4 {02}
OR1_RAM_A5
OR2_RAM_A5
I475 INT_RAM_A5 {02}
OR1_RAM_A6
OR2_RAM_A6
I474 INT_RAM_A6 {02}
OR1_RAM_A7
OR2_RAM_A7
I473 INT_RAM_A7 {02}
OR1_RAM_A8
OR2_RAM_A8
I472 INT_RAM_A8 {02}
OR1_RAM_A9
OR2_RAM_A9
I471 INT_RAM_A9 {02}
OR1_RAM_A10
OR2_RAM_A10
I470 INT_RAM_A10 {02}
OR1_RAM_A11
OR2_RAM_A11
I400 INT_RAM_A11 {02}
OR1_RAM_A12
OR2_RAM_A12
I399 INT_RAM_A12 {02}
OR1_RAM_A13
OR2_RAM_A13
I397 INT_RAM_A13 {02}
OR1_RAM_A14
OR2_RAM_A14
I398 INT_RAM_A14 {02}

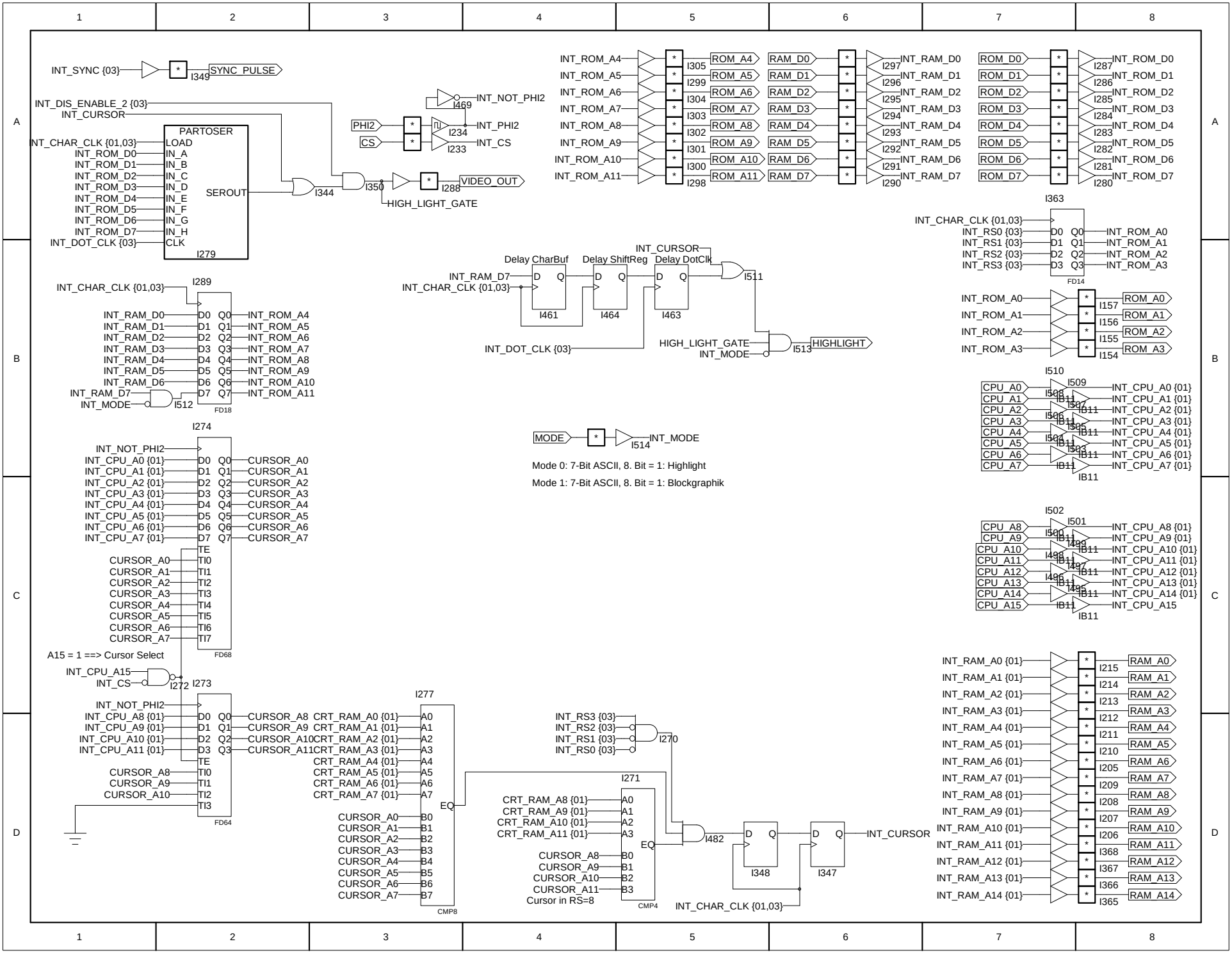
INT_SYNC {03}
I349
SYNC_PULSE
INT_DIS_ENABLE_2 {03}
INT_CURSOR
PARTOSER
INT_CHAR_CLK {01,03}
INT_ROM_D0
INT_ROM_D1
INT_ROM_D2
INT_ROM_D3
INT_ROM_D4
INT_ROM_D5
INT_ROM_D6
INT_ROM_D7
INT_DOT_CLK {03}
LOAD
IN_A
IN_B
IN_C
IN_D
IN_E
IN_F
IN_G
IN_H
CLK
SEROUT
I279
I344
I350
HIGH_LIGHT_GATE
I288
VIDEO_OUT
PHI2
CS
I234
I233
I469
INT_NOT_PHI2
INT_PHI2
INT_CS
INT_ROM_A4
INT_ROM_A5
INT_ROM_A6
INT_ROM_A7
INT_ROM_A8
INT_ROM_A9
INT_ROM_A10
INT_ROM_A11
I305
I299
I304
I303
I302
I301
I300
I298
ROM_A4
ROM_A5
ROM_A6
ROM_A7
ROM_A8
ROM_A9
ROM_A10
ROM_A11
RAM_D0
RAM_D1
RAM_D2
RAM_D3
RAM_D4
RAM_D5
RAM_D6
RAM_D7
I297
I296
I295
I294
I293
I292
I291
I290
INT_RAM_D0
INT_RAM_D1
INT_RAM_D2
INT_RAM_D3
INT_RAM_D4
INT_RAM_D5
INT_RAM_D6
INT_RAM_D7
ROM_D0
ROM_D1
ROM_D2
ROM_D3
ROM_D4
ROM_D5
ROM_D6
ROM_D7
I287
I286
I285
I284
I283
I282
I281
I280
INT_ROM_D0
INT_ROM_D1
INT_ROM_D2
INT_ROM_D3
INT_ROM_D4
INT_ROM_D5
INT_ROM_D6
INT_ROM_D7
I363
INT_CHAR_CLK {01,03}
INT_RS0 {03}
INT_RS1 {03}
INT_RS2 {03}
INT_RS3 {03}
D0 Q0
D1 Q1
D2 Q2
D3 Q3
FD14
INT_ROM_A0
INT_ROM_A1
INT_ROM_A2
INT_ROM_A3
I157
I156
I155
I154
ROM_A0
ROM_A1
ROM_A2
ROM_A3
Delay CharBuf
Delay ShiftReg
Delay DotClk
INT_CURSOR
INT_RAM_D7
INT_CHAR_CLK {01,03}
I461
I464
I463
I511
INT_DOT_CLK {03}
HIGH_LIGHT_GATE
INT_MODE
I513
HIGHLIGHT
I289
INT_CHAR_CLK {01,03}
INT_RAM_D0
INT_RAM_D1
INT_RAM_D2
INT_RAM_D3
INT_RAM_D4
INT_RAM_D5
INT_RAM_D6
INT_RAM_D7
INT_MODE
I512
D0 Q0
D1 Q1
D2 Q2
D3 Q3
D4 Q4
D5 Q5
D6 Q6
D7 Q7
FD18
INT_ROM_A4
INT_ROM_A5
INT_ROM_A6
INT_ROM_A7
INT_ROM_A8
INT_ROM_A9
INT_ROM_A10
INT_ROM_A11
I510
CPU_A0
CPU_A1
CPU_A2
CPU_A3
CPU_A4
CPU_A5
CPU_A6
CPU_A7
I509
I508
I507
I506
I505
I504
I503
IB11
INT_CPU_A0 {01}
INT_CPU_A1 {01}
INT_CPU_A2 {01}
INT_CPU_A3 {01}
INT_CPU_A4 {01}
INT_CPU_A5 {01}
INT_CPU_A6 {01}
INT_CPU_A7 {01}
MODE
I514
INT_MODE
Mode 0: 7-Bit ASCII, 8. Bit = 1: Highlight
Mode 1: 7-Bit ASCII, 8. Bit = 1: Blockgraphik
I274
INT_NOT_PHI2
INT_CPU_A0 {01}
INT_CPU_A1 {01}
INT_CPU_A2 {01}
INT_CPU_A3 {01}
INT_CPU_A4 {01}
INT_CPU_A5 {01}
INT_CPU_A6 {01}
INT_CPU_A7 {01}
D0 Q0
D1 Q1
D2 Q2
D3 Q3
D4 Q4
D5 Q5
D6 Q6
D7 Q7
TE
TI0
TI1
TI2
TI3
TI4
TI5
TI6
TI7
FD68
CURSOR_A0
CURSOR_A1
CURSOR_A2
CURSOR_A3
CURSOR_A4
CURSOR_A5
CURSOR_A6
CURSOR_A7
A15 = 1 ==> Cursor Select
INT_CPU_A15
INT_CS
I272
I273
INT_NOT_PHI2
INT_CPU_A8 {01}
INT_CPU_A9 {01}
INT_CPU_A10 {01}
INT_CPU_A11 {01}
D0 Q0
D1 Q1
D2 Q2
D3 Q3
TE
TI0
TI1
TI2
TI3
FD64
CURSOR_A8
CURSOR_A9
CURSOR_A10
CURSOR_A11
I502
I501
I500
I499
I498
I497
I496
I495
IB11
INT_CPU_A8 {01}
INT_CPU_A9 {01}
INT_CPU_A10 {01}
INT_CPU_A11 {01}
INT_CPU_A12 {01}
INT_CPU_A13 {01}
INT_CPU_A14 {01}
INT_CPU_A15
I277
CRT_RAM_A0 {01}
CRT_RAM_A1 {01}
CRT_RAM_A2 {01}
CRT_RAM_A3 {01}
CRT_RAM_A4 {01}
CRT_RAM_A5 {01}
CRT_RAM_A6 {01}
CRT_RAM_A7 {01}
A0
A1
A2
A3
A4
A5
A6
A7
EQ
CURSOR_A0
CURSOR_A1
CURSOR_A2
CURSOR_A3
CURSOR_A4
CURSOR_A5
CURSOR_A6
CURSOR_A7
B0
B1
B2
B3
B4
B5
B6
B7
CMP8
INT_RS3 {03}
INT_RS2 {03}
INT_RS1 {03}
INT_RS0 {03}
I270
I271
CRT_RAM_A8 {01}
CRT_RAM_A9 {01}
CRT_RAM_A10 {01}
CRT_RAM_A11 {01}
A0
A1
A2
A3
EQ
CURSOR_A8
CURSOR_A9
CURSOR_A10
CURSOR_A11
B0
B1
B2
B3
Cursor in RS=8
CMP4
I482
D Q
I348
D Q
I347
INT_CURSOR
INT_CHAR_CLK {01,03}
INT_RAM_A0 {01}
INT_RAM_A1 {01}
INT_RAM_A2 {01}
INT_RAM_A3 {01}
INT_RAM_A4 {01}
INT_RAM_A5 {01}
INT_RAM_A6 {01}
INT_RAM_A7 {01}
INT_RAM_A8 {01}
INT_RAM_A9 {01}
INT_RAM_A10 {01}
INT_RAM_A11 {01}
INT_RAM_A12 {01}
INT_RAM_A13 {01}
INT_RAM_A14 {01}
I215
I214
I213
I212
I211
I210
I205
I209
I208
I207
I206
I368
I367
I366
I365
RAM_A0
RAM_A1
RAM_A2
RAM_A3
RAM_A4
RAM_A5
RAM_A6
RAM_A7
RAM_A8
RAM_A9
RAM_A10
RAM_A11
RAM_A12
RAM_A13
RAM_A14

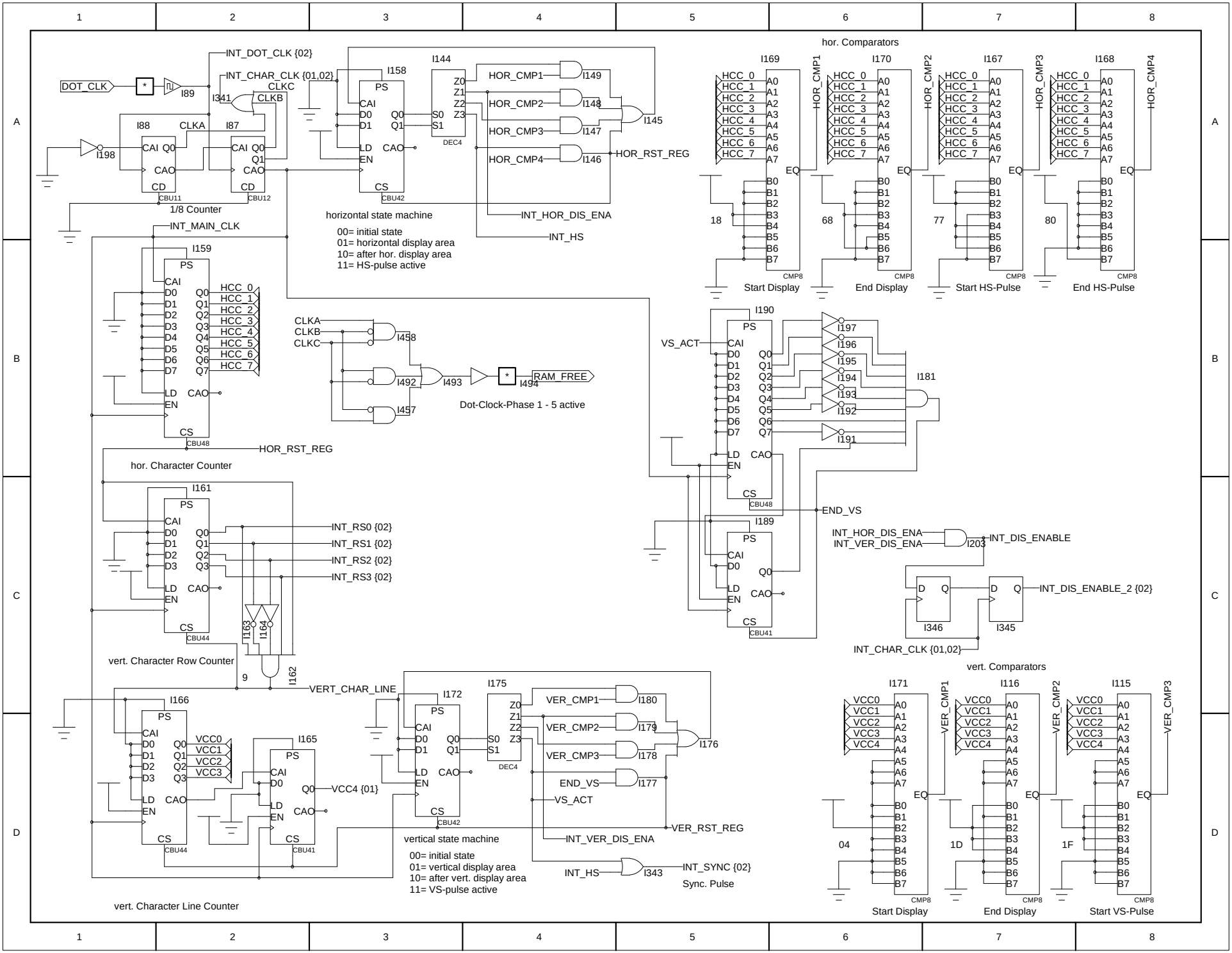
hor. Comparators
INT_DOT_CLK {02}
INT_CHAR_CLK {01,02}
DOT_CLK
I89
I341
CLKC
CLKB
CLKA
I88
I87
I198
CBU11
CBU12
1/8 Counter
I158
I144
DEC4
HOR_CMP1
HOR_CMP2
HOR_CMP3
HOR_CMP4
I149
I148
I147
I146
I145
HOR_RST_REG
CBU42
horizontal state machine
INT_HOR_DIS_ENA
INT_HS
00= initial state
01= horizontal display area
10= after hor. display area
11= HS-pulse active
I169
I170
I167
I168
CMP8
Start Display
End Display
Start HS-Pulse
End HS-Pulse
INT_MAIN_CLK
I159
CBU48
hor. Character Counter
CLKA
CLKB
CLKC
I458
I492
I457
I493
I494
RAM_FREE
Dot-Clock-Phase 1 - 5 active
I190
VS_ACT
I197
I196
I195
I194
I193
I192
I191
I181
END_VS
I189
CBU41
INT_HOR_DIS_ENA
INT_VER_DIS_ENA
I203
INT_DIS_ENABLE
I346
I345
INT_DIS_ENABLE_2 {02}
INT_CHAR_CLK {01,02}
vert. Comparators
I161
INT_RS0 {02}
INT_RS1 {02}
INT_RS2 {02}
INT_RS3 {02}
CBU44
I163
I164
I162
vert. Character Row Counter
VERT_CHAR_LINE
I166
I165
VCC0
VCC1
VCC2
VCC3
VCC4 {01}
I172
I175
VER_CMP1
VER_CMP2
VER_CMP3
I180
I179
I178
I177
I176
END_VS
VS_ACT
VER_RST_REG
INT_VER_DIS_ENA
vertical state machine
00= initial state
01= vertical display area
10= after vert. display area
11= VS-pulse active
INT_HS
I343
INT_SYNC {02}
Sync. Pulse
vert. Character Line Counter
I171
I116
I115
Start VS-Pulse